# STI17NF25 - STD17NF25
# STF17NF25 - STP17NF25

N-channel 250V - 0.14Ω - 17A - TO-220/FP - DPAK - I²PAK
Low gate charge STripFET™ II Power MOSFET

## General features

| Type | $V_{DSS}$ | $R_{DS(on)}$ | $I_D$ | $P_{TOT}$ |
|---|---|---|---|---|
| STD17NF25 | 250V | < 0.165Ω | 17A | 90W |
| STI17NF25 | 250V | < 0.165Ω | 17A | 90W |
| STF17NF25 | 250V | < 0.165Ω | 17A | 25W |
| STP17NF25 | 250V | < 0.165Ω | 17A | 90W |

- Low gate charge
- 100% avalanche tested
- Exceptional dv/dt capability

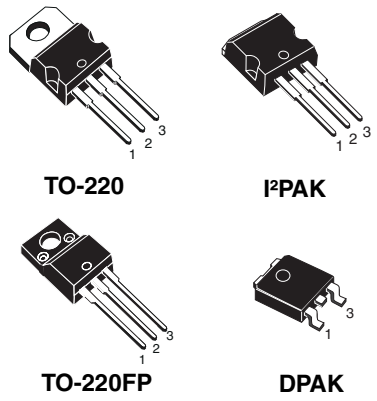


## Description

This Power MOSFET series realized with STMicroelectronics unique STripFET™ process has specifically been designed to minimize input capacitance and gate charge. It is therefore suitable as primary switch in advanced high-efficiency isolated DC-DC converters.

## Applications

- Switching applications

## Internal schematic diagram

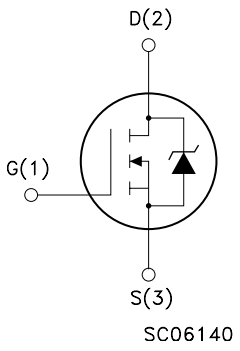


## Order codes

| Part number | Marking | Package | Packaging |
|---|---|---|---|
| STD17NF25 | 17NF25 | DPAK | Tape & reel |
| STI17NF25 | 17NF25 | I²PAK | Tube |
| STF17NF25 | 17NF25 | TO-220FP | Tube |
| STP17NF25 | 17NF25 | TO-220 | Tube |

# Contents

**1 Electrical ratings . . . . . 3**

**2 Electrical characteristics . . . . . 4**

2.1 Electrical characteristics (curves) . . . . . 6

**3 Test circuit . . . . . 9**

**4 Package mechanical data . . . . . 10**

**5 Packaging mechanical data . . . . . 15**

**6 Revision history . . . . . 16**

# 1 Electrical ratings

**Table 1. Absolute maximum ratings**

| Symbol | Parameter | Value | | Unit |
|---|---|---|---|---|
| | | TO-220 DPAK/I²PAK | TO-220FP | |
| $V_{DS}$ | Drain-source voltage ($V_{GS}$ = 0) | 250 | | V |
| $V_{GS}$ | Gate-source voltage | ±20 | | V |
| $I_D$ | Drain current (continuous) at $T_C$ = 25°C | 17 | 17(1) | A |
| $I_D$ | Drain current (continuous) at $T_C$=100°C | 10 | 10(1) | A |
| $I_{DM}$(2) | Drain current (pulsed) | 68 | 68(1) | A |
| $P_{TOT}$ | Total dissipation at $T_C$ = 25°C | 90 | 25 | W |
| | Derating factor | 0.72 | 0.2 | W/°C |
| dv/dt(3) | Peak diode recovery voltage slope | 10 | | V/ns |
| $T_J$<br>$T_{stg}$ | Operating junction temperature<br>Storage temperature | -55 to 150 | | °C |

1. Limited only by maximum temperature allowed
2. Pulse width limited by safe operating area
3. $I_{SD}$ ≤17A, di/dt ≤200A/µs, $V_{DD}$ ≤ 80%$V_{(BR)DSS}$

**Table 2. Thermal data**

| Symbol | Parameter | TO-220 I²PAK | DPAK | TO-220FP | Unit |
|---|---|---|---|---|---|
| $R_{thj-case}$ | Thermal resistance junction-case max | 1.38 | | 5 | °C/W |
| $R_{thj-amb}$ | Thermal resistance junction-ambient max | 62.5 | 50 (1) | 62.5 | °C/W |
| $T_l$ | Maximum lead temperature for soldering purpose | 300 | | | °C |

1. When mounted on 1inch² FR-4, 2 Oz copper board

**Table 3. Avalanche data**

| Symbol | Parameter | Value | Unit |
|---|---|---|---|
| $I_{AR}$ | Avalanche current, repetitive or not repetitive (pulse width limited by Tjmax) | 17 | A |
| $E_{AS}$ | Single pulse avalanche energy (starting Tj=25°C, $I_D$=$I_{AR}$, $V_{DD}$=50V) | 100 | mJ |

# 2 Electrical characteristics

($T_{CASE}$=25°C unless otherwise specified)

**Table 4. On/off states**

| Symbol | Parameter | Test conditions | Min. | Typ. | Max. | Unit |
|---|---|---|---|---|---|---|
| $V_{(BR)DSS}$ | Drain-source breakdown voltage | $I_D$ = 1mA, $V_{GS}$= 0 | 250 | | | V |
| $I_{DSS}$ | Zero gate voltage drain current ($V_{GS}$ = 0) | $V_{DS}$ = Max rating,<br>$V_{DS}$ = Max rating,Tc=125°C | | | 1<br>10 | µA<br>µA |
| $I_{GSS}$ | Gate body leakage current ($V_{DS}$ = 0) | $V_{GS}$ = ±20V | | | ±100 | nA |
| $V_{GS(th)}$ | Gate threshold voltage | $V_{DS}$= $V_{GS}$, $I_D$ = 250µA | 2 | 3 | 4 | V |
| $R_{DS(on)}$ | Static drain-source on resistance | $V_{GS}$= 10V, $I_D$= 8.5A | | 0.14 | 0.165 | Ω |

**Table 5. Dynamic**

| Symbol | Parameter | Test conditions | Min. | Typ. | Max. | Unit |
|---|---|---|---|---|---|---|
| $g_{fs}$ (1) | Forward transconductance | $V_{DS}$ = 15V, $I_D$ = 8.5A | | 14 | | S |
| $C_{iss}$<br>$C_{oss}$<br>$C_{rss}$ | Input capacitance<br>Output capacitance<br>Reverse transfer capacitance | $V_{DS}$ =25V, f=1 MHz, $V_{GS}$=0 | | 1000<br>178<br>28 | | pF<br>pF<br>pF |
| $C_{oss\ eq}$ | Equivalent output capacitance | $V_{GS}$=0, $V_{DS}$ =0V to 200V | | 135 | | pF |
| $Q_g$<br>$Q_{gs}$<br>$Q_{gd}$ | Total gate charge<br>Gate-source charge<br>Gate-drain charge | $V_{DD}$=200V, $I_D$ = 17A<br>$V_{GS}$ =10V<br>*(see Figure 16)* | | 29.5<br>4.8<br>15.6 | | nC<br>nC<br>nC |
| $R_G$ | Gate input resistance | f=1MHz gate DC bias=0 test signal level=20mV open drain | | 2 | | Ω |

1. Pulsed: pulse duration=300µs, duty cycle 1.5%

**Table 6. Switching times**

| Symbol | Parameter | Test conditions | Min. | Typ. | Max. | Unit |
|---|---|---|---|---|---|---|
| $t_{d(on)}$<br>$t_r$ | Turn-on delay time<br>Rise time | $V_{DD}$=125V, $I_D$=8.5A,<br>$R_G$=4.7Ω, $V_{GS}$=10V<br>*(see Figure 15)* | | 8.8<br>17.2 | | ns<br>ns |
| $t_{d(off)}$<br>$t_f$ | Turn-off delay time<br>Fall time | $V_{DD}$=125V, $I_D$=8.5A,<br>$R_G$=4.7Ω, $V_{GS}$=10V<br>*(see Figure 15)* | | 21<br>8.8 | | ns<br>ns |

**Table 7. Source drain diode**

| Symbol | Parameter | Test conditions | Min. | Typ. | Max. | Unit |
|---|---|---|---|---|---|---|
| $I_{SD}$<br>$I_{SDM}$(1) | Source-drain current<br>Source-drain current (pulsed) | | | | 17<br>68 | A<br>A |
| $V_{SD}$(2) | Forward on voltage | $I_{SD}$=17A, $V_{GS}$=0 | | | 1.6 | V |
| $t_{rr}$<br>$Q_{rr}$<br>$I_{RRM}$ | Reverse recovery time<br>Reverse recovery charge<br>Reverse recovery current | $I_{SD}$ = 17A, di/dt = 100A/µs,<br>$V_{DD}$ = 50 V, Tj = 25°C<br>*(see Figure 17)* | | 157<br>0.91<br>11.6 | | ns<br>µC<br>A |
| $t_{rr}$<br>$Q_{rr}$<br>$I_{RRM}$ | Reverse recovery time<br>Reverse recovery charge<br>Reverse recovery current | $I_{SD}$ = 17A, di/dt = 100A/µs,<br>$V_{DD}$ = 50 V, Tj=150°C<br>*(see Figure 17)* | | 196<br>1.34<br>13.7 | | ns<br>µC<br>A |

1. Pulse width limited by safe operating area
2. Pulsed: pulse duration=300µs, duty cycle 1.5%

## 2.1 Electrical characteristics (curves)

**Figure 1. Safe operating area for TO-220 / DPAK / I²PAK**

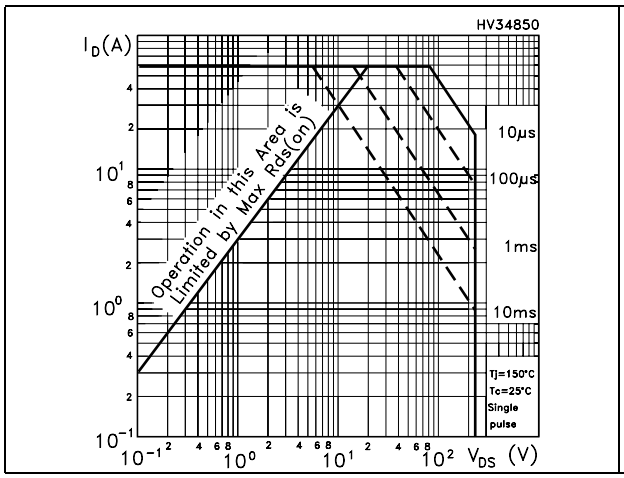


**Figure 2. Thermal impedance for TO-220 / DPAK / I²PAK**

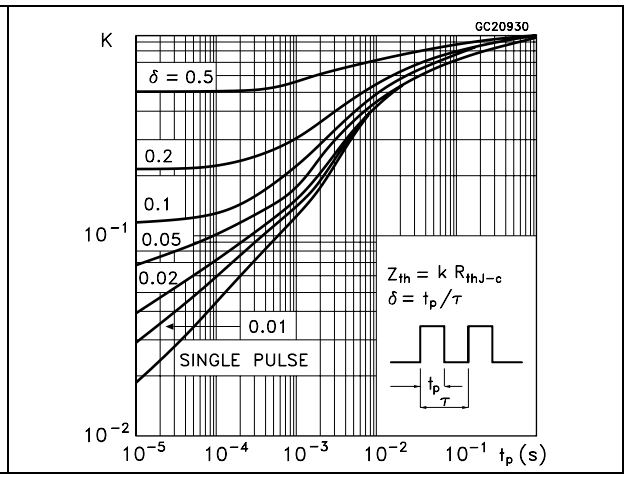


**Figure 3. Safe operating area for TO-220FP**

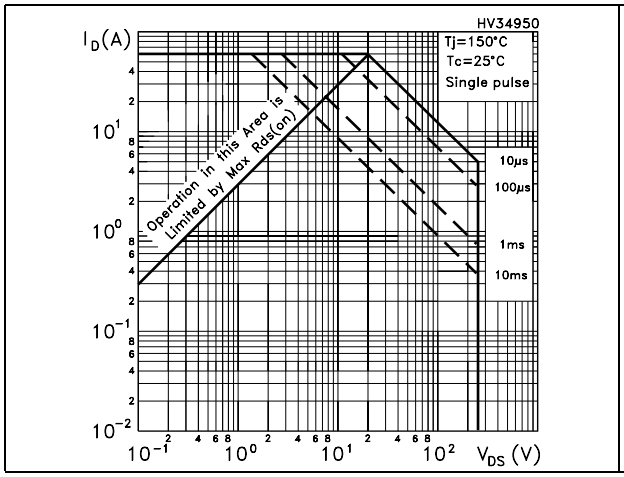


**Figure 4. Thermal impedance for TO-220FP**

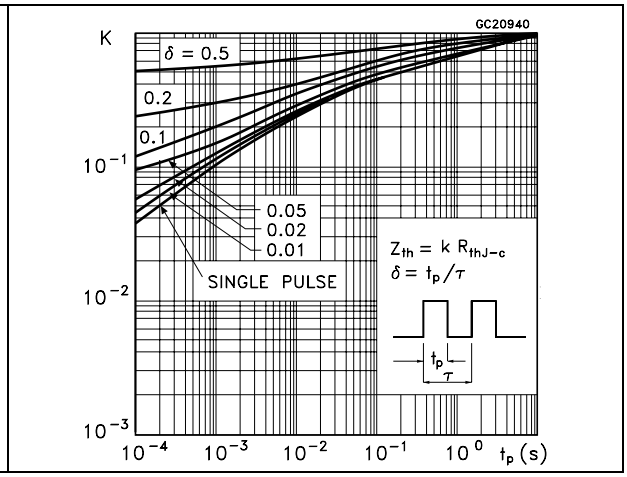


**Figure 5. Output characteristics**

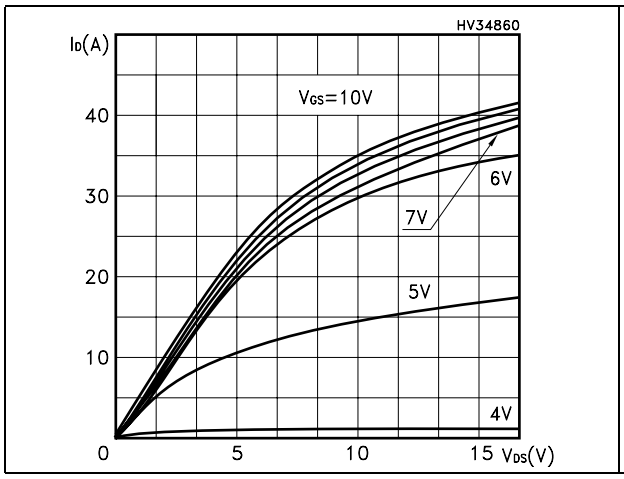


**Figure 6. Transfer characteristics**

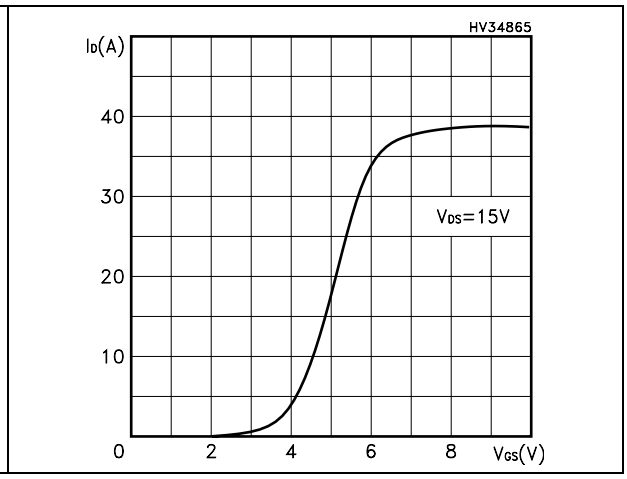

**Figure 7. Normalized $BV_{DSS}$ vs temperature**

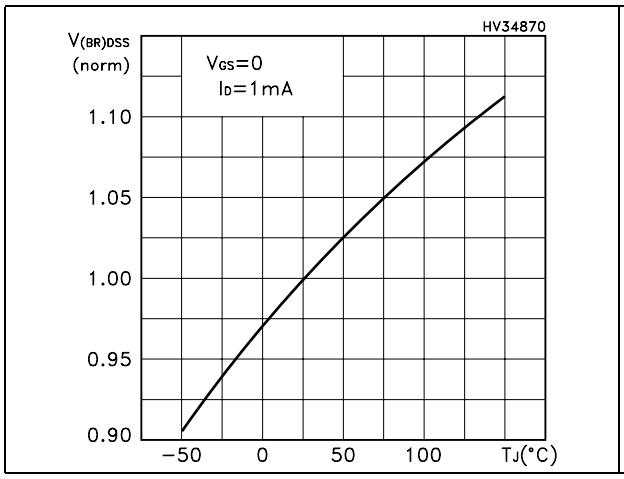


**Figure 8. Static drain-source on resistance**

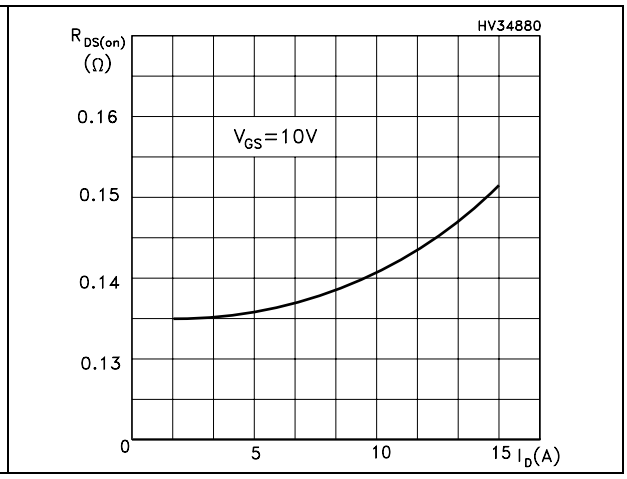


**Figure 9. Gate charge vs gate-source voltage**

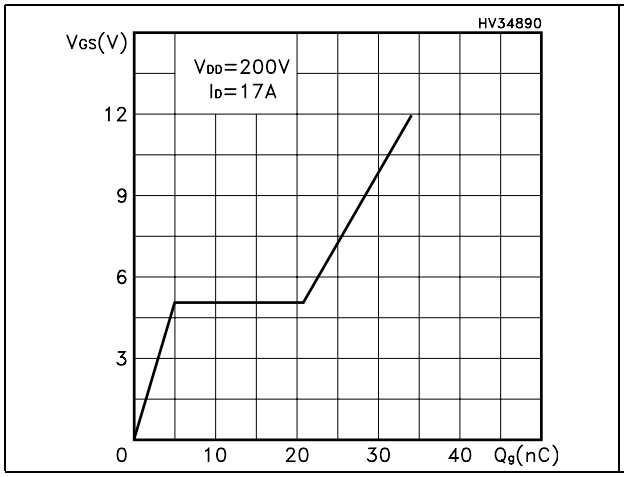


**Figure 10. Capacitance variations**

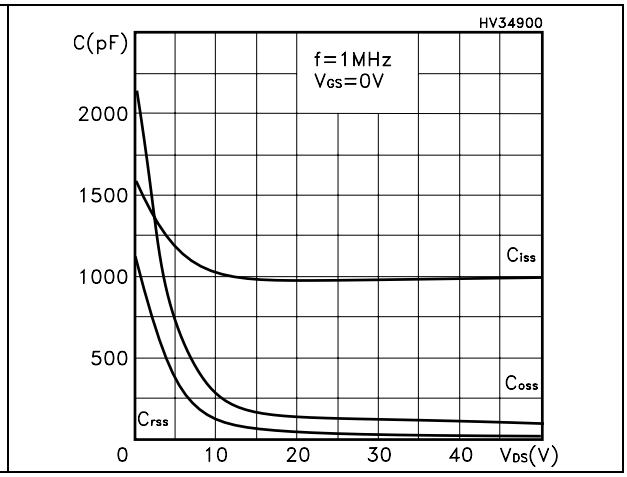


**Figure 11. Normalized gate threshold voltage vs temperature**

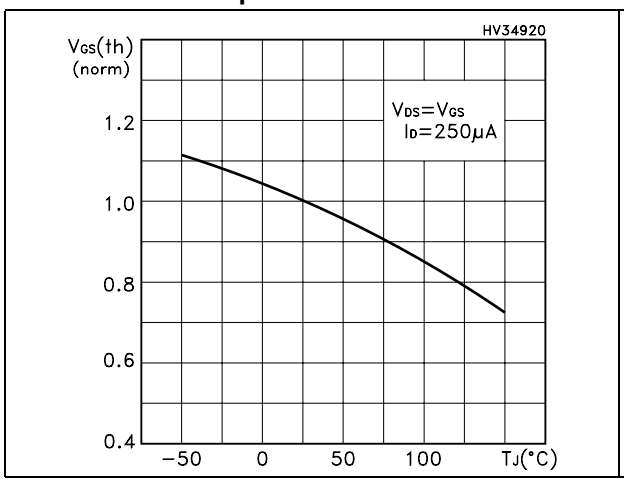


**Figure 12. Normalized on resistance vs temperature**

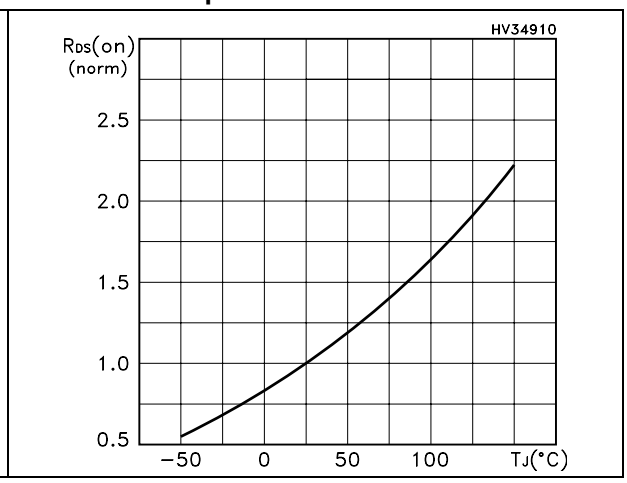

**Figure 13. Source-drain diode forward characteristics**

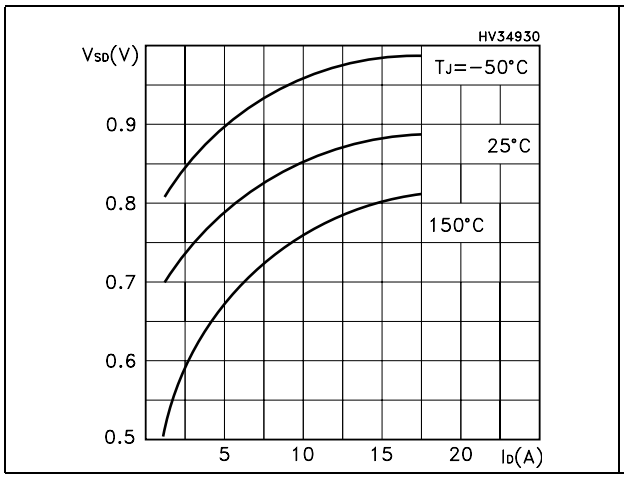


**Figure 14. Maximum avalanche energy**

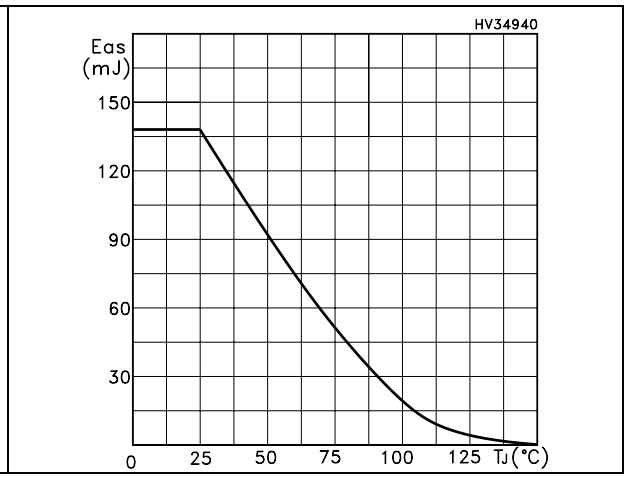

# 3 Test circuit

**Figure 15. Switching times test circuit for resistive load**

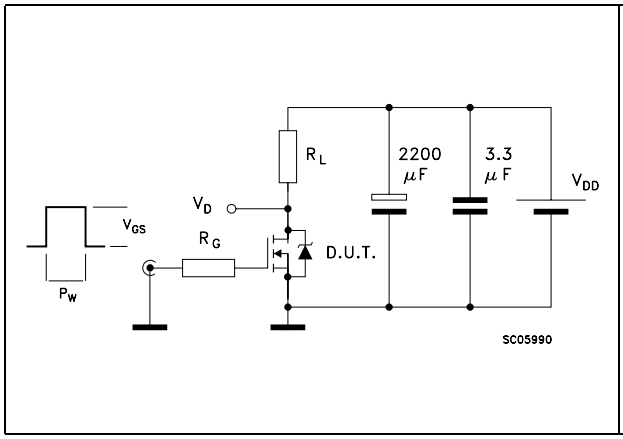


**Figure 16. Gate charge test circuit**

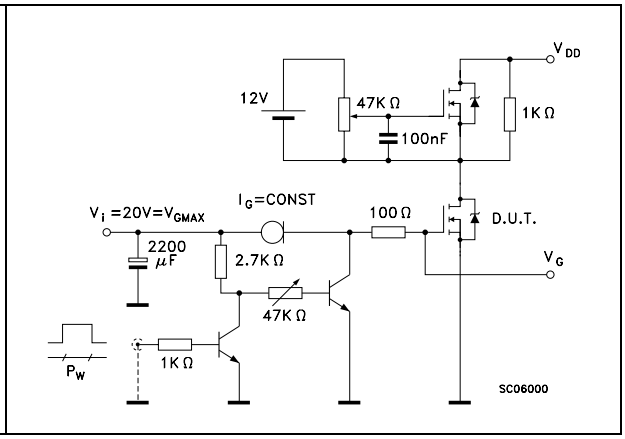


**Figure 17. Test circuit for inductive load switching and diode recovery times**

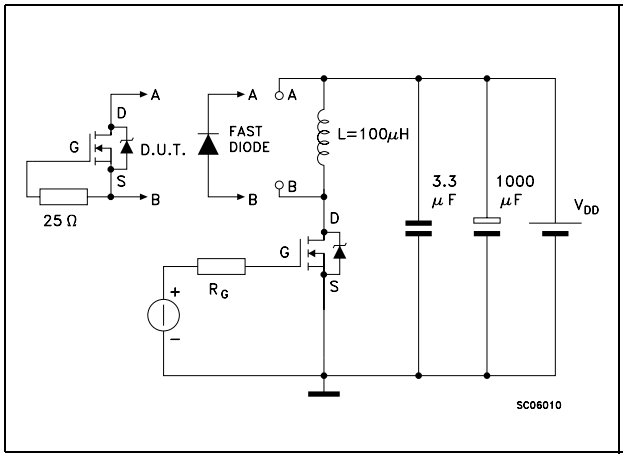


**Figure 18. Unclamped Inductive load test circuit**

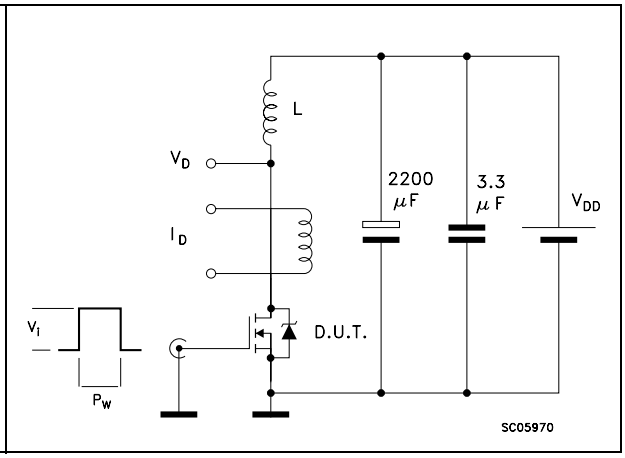


**Figure 19. Unclamped inductive waveform**

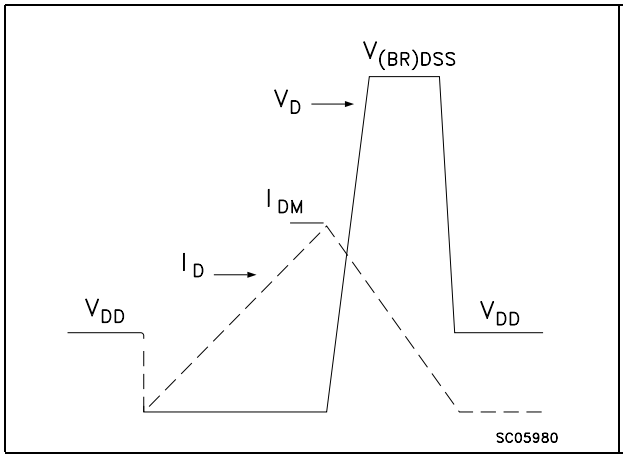


**Figure 20. Switching time waveform**

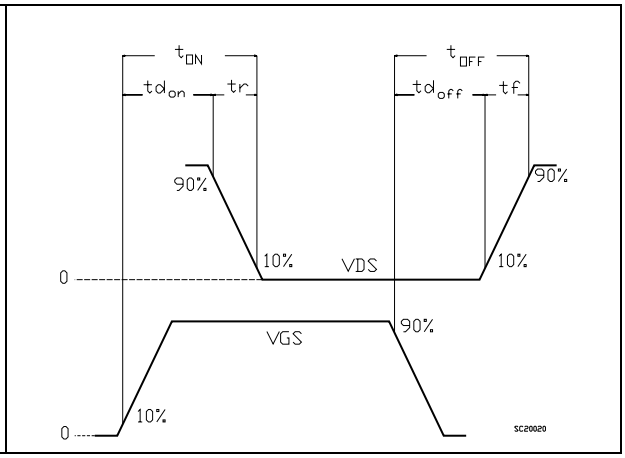

# 4 Package mechanical data

In order to meet environmental requirements, ST offers these devices in ECOPACK® packages. These packages have a Lead-free second level interconnect. The category of second level interconnect is marked on the package and on the inner box label, in compliance with JEDEC Standard JESD97. The maximum ratings related to soldering conditions are also marked on the inner box label. ECOPACK is an ST trademark. ECOPACK specifications are available at: *www.st.com*

## TO-220 MECHANICAL DATA

| DIM. | mm. | | | inch | | |
|---|---|---|---|---|---|---|
| | MIN. | TYP | MAX. | MIN. | TYP. | MAX. |
| A | 4.40 | | 4.60 | 0.173 | | 0.181 |
| b | 0.61 | | 0.88 | 0.024 | | 0.034 |
| b1 | 1.15 | | 1.70 | 0.045 | | 0.066 |
| c | 0.49 | | 0.70 | 0.019 | | 0.027 |
| D | 15.25 | | 15.75 | 0.60 | | 0.620 |
| E | 10 | | 10.40 | 0.393 | | 0.409 |
| e | 2.40 | | 2.70 | 0.094 | | 0.106 |
| e1 | 4.95 | | 5.15 | 0.194 | | 0.202 |
| F | 1.23 | | 1.32 | 0.048 | | 0.052 |
| H1 | 6.20 | | 6.60 | 0.244 | | 0.256 |
| J1 | 2.40 | | 2.72 | 0.094 | | 0.107 |
| L | 13 | | 14 | 0.511 | | 0.551 |
| L1 | 3.50 | | 3.93 | 0.137 | | 0.154 |
| L20 | | 16.40 | | | 0.645 | |
| L30 | | 28.90 | | | 1.137 | |
| øP | 3.75 | | 3.85 | 0.147 | | 0.151 |
| Q | 2.65 | | 2.95 | 0.104 | | 0.116 |

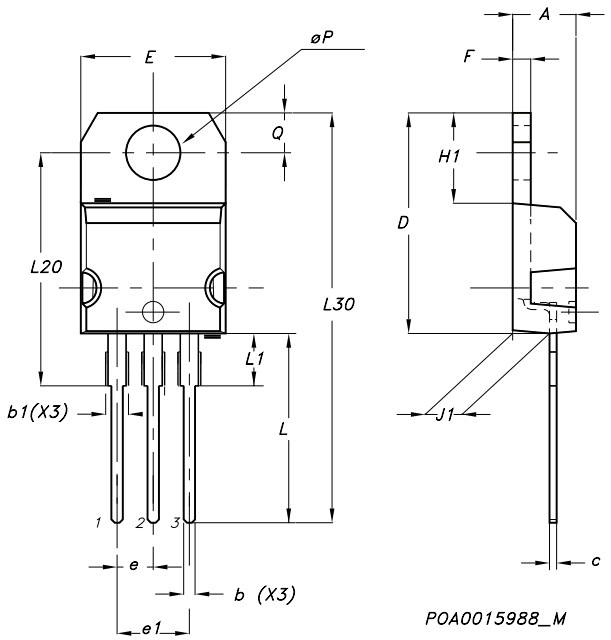

## DPAK MECHANICAL DATA

| DIM. | mm. | | | inch | | |
|---|---|---|---|---|---|---|
| | MIN. | TYP | MAX. | MIN. | TYP. | MAX. |
| A | 2.2 | | 2.4 | 0.086 | | 0.094 |
| A1 | 0.9 | | 1.1 | 0.035 | | 0.043 |
| A2 | 0.03 | | 0.23 | 0.001 | | 0.009 |
| B | 0.64 | | 0.9 | 0.025 | | 0.035 |
| b4 | 5.2 | | 5.4 | 0.204 | | 0.212 |
| C | 0.45 | | 0.6 | 0.017 | | 0.023 |
| C2 | 0.48 | | 0.6 | 0.019 | | 0.023 |
| D | 6 | | 6.2 | 0.236 | | 0.244 |
| D1 | | 5.1 | | | 0.200 | |
| E | 6.4 | | 6.6 | 0.252 | | 0.260 |
| E1 | | 4.7 | | | 0.185 | |
| e | | 2.28 | | | 0.090 | |
| e1 | 4.4 | | 4.6 | 0.173 | | 0.181 |
| H | 9.35 | | 10.1 | 0.368 | | 0.397 |
| L | 1 | | | 0.039 | | |
| (L1) | | 2.8 | | | 0.110 | |
| L2 | | 0.8 | | | 0.031 | |
| L4 | 0.6 | | 1 | 0.023 | | 0.039 |
| R | | 0.2 | | | 0.008 | |
| V2 | 0° | | 8° | 0° | | 8° |

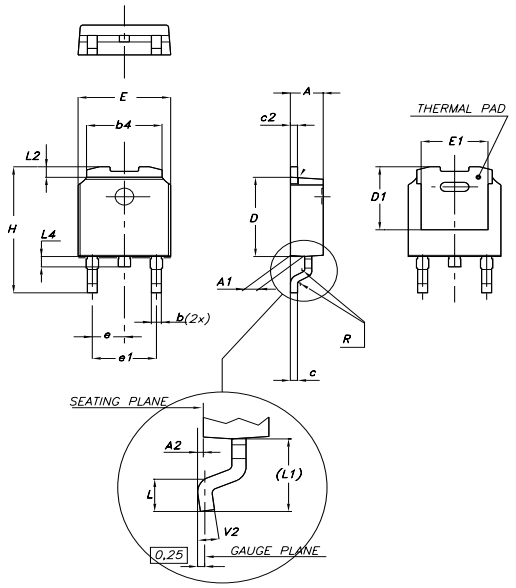


0068772-F

## TO-220FP MECHANICAL DATA

| DIM. | mm. | | | inch | | |
|---|---|---|---|---|---|---|
| | MIN. | TYP | MAX. | MIN. | TYP. | MAX. |
| A | 4.4 | | 4.6 | 0.173 | | 0.181 |
| B | 2.5 | | 2.7 | 0.098 | | 0.106 |
| D | 2.5 | | 2.75 | 0.098 | | 0.108 |
| E | 0.45 | | 0.7 | 0.017 | | 0.027 |
| F | 0.75 | | 1 | 0.030 | | 0.039 |
| F1 | 1.15 | | 1.7 | 0.045 | | 0.067 |
| F2 | 1.15 | | 1.7 | 0.045 | | 0.067 |
| G | 4.95 | | 5.2 | 0.195 | | 0.204 |
| G1 | 2.4 | | 2.7 | 0.094 | | 0.106 |
| H | 10 | | 10.4 | 0.393 | | 0.409 |
| L2 | | 16 | | | 0.630 | |
| L3 | 28.6 | | 30.6 | 1.126 | | 1.204 |
| L4 | 9.8 | | 10.6 | .0385 | | 0.417 |
| L5 | 2.9 | | 3.6 | 0.114 | | 0.141 |
| L6 | 15.9 | | 16.4 | 0.626 | | 0.645 |
| L7 | 9 | | 9.3 | 0.354 | | 0.366 |
| Ø | 3 | | 3.2 | 0.118 | | 0.126 |

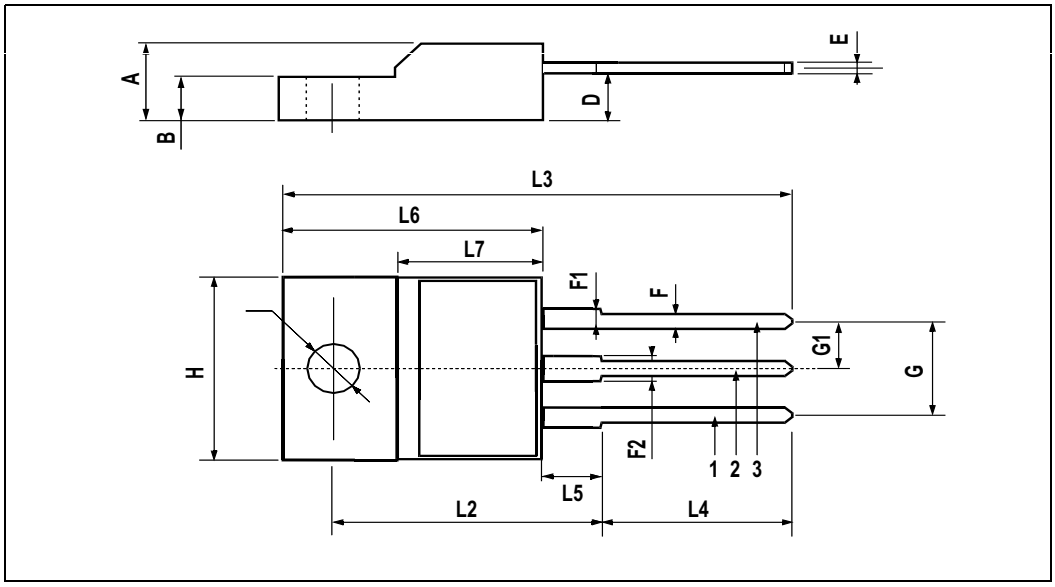

## TO-262 ($I^2PAK$) MECHANICAL DATA

| DIM. | mm. | | | inch | | |
|---|---|---|---|---|---|---|
| | MIN. | TYP | MAX. | MIN. | TYP. | MAX. |
| A | 4.40 | | 4.60 | 0.173 | | 0.181 |
| A1 | 2.40 | | 2.72 | 0.094 | | 0.107 |
| b | 0.61 | | 0.88 | 0.024 | | 0.034 |
| b1 | 1.14 | | 1.70 | 0.044 | | 0.066 |
| c | 0.49 | | 0.70 | 0.019 | | 0.027 |
| c2 | 1.23 | | 1.32 | 0.048 | | 0.052 |
| D | 8.95 | | 9.35 | 0.352 | | 0.368 |
| e | 2.40 | | 2.70 | 0.094 | | 0.106 |
| e1 | 4.95 | | 5.15 | 0.194 | | 0.202 |
| E | 10 | | 10.40 | 0.393 | | 0.410 |
| L | 13 | | 14 | 0.511 | | 0.551 |
| L1 | 3.50 | | 3.93 | 0.137 | | 0.154 |
| L2 | 1.27 | | 1.40 | 0.050 | | 0.055 |

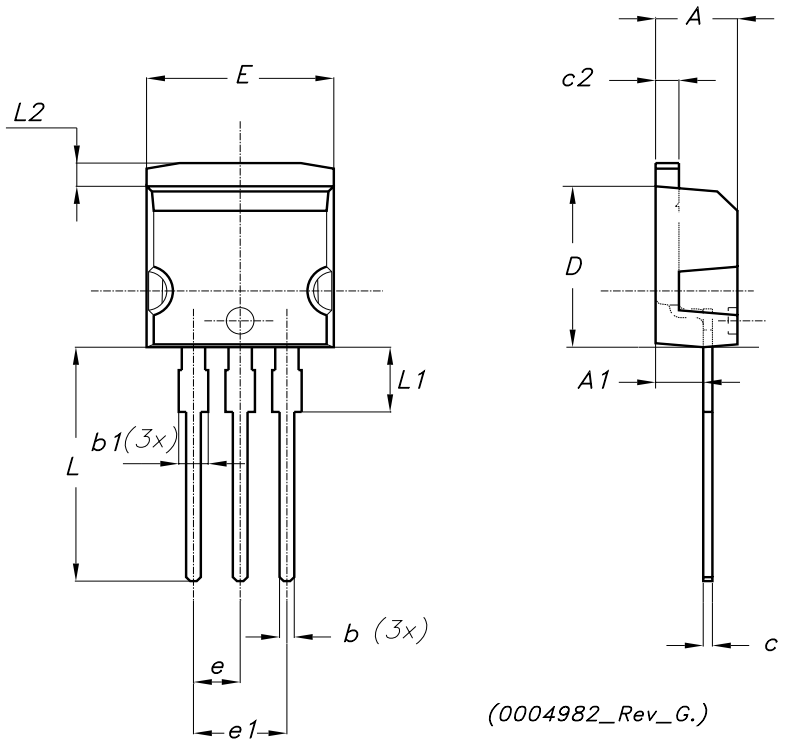

# 5 Packaging mechanical data

## DPAK FOOTPRINT

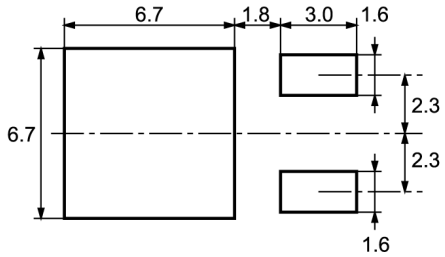


All dimensions are in millimeters

## TAPE AND REEL SHIPMENT

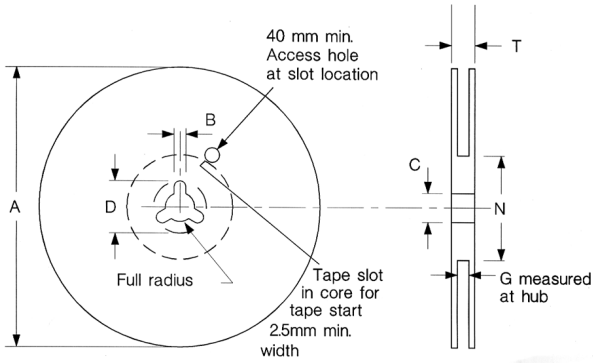


REEL MECHANICAL DATA

| DIM. | mm | | inch | |
|---|---|---|---|---|
| | MIN. | MAX. | MIN. | MAX. |
| A | | 330 | | 12.992 |
| B | 1.5 | | 0.059 | |
| C | 12.8 | 13.2 | 0.504 | 0.520 |
| D | 20.2 | | 0.795 | |
| G | 16.4 | 18.4 | 0.645 | 0.724 |
| N | 50 | | 1.968 | |
| T | | 22.4 | | 0.881 |

| BASE QTY | BULK QTY |
|---|---|
| 2500 | 2500 |

TAPE MECHANICAL DATA

| DIM. | mm | | inch | |
|---|---|---|---|---|
| | MIN. | MAX. | MIN. | MAX. |
| A0 | 6.8 | 7 | 0.267 | 0.275 |
| B0 | 10.4 | 10.6 | 0.409 | 0.417 |
| B1 | | 12.1 | | 0.476 |
| D | 1.5 | 1.6 | 0.059 | 0.063 |
| D1 | 1.5 | | 0.059 | |
| E | 1.65 | 1.85 | 0.065 | 0.073 |
| F | 7.4 | 7.6 | 0.291 | 0.299 |
| K0 | 2.55 | 2.75 | 0.100 | 0.108 |
| P0 | 3.9 | 4.1 | 0.153 | 0.161 |
| P1 | 7.9 | 8.1 | 0.311 | 0.319 |
| P2 | 1.9 | 2.1 | 0.075 | 0.082 |
| R | 40 | | 1.574 | |
| W | 15.7 | 16.3 | 0.618 | 0.641 |

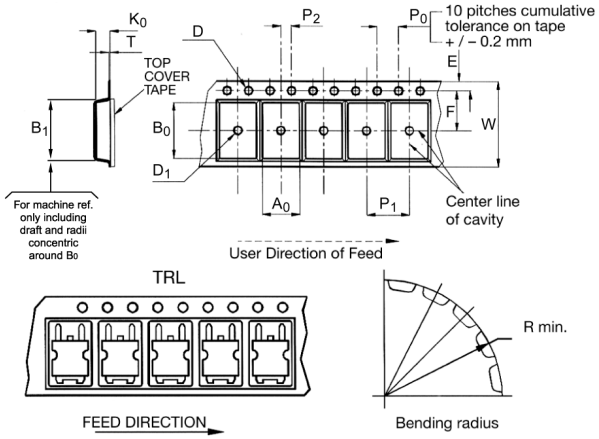

# 6 Revision history

**Table 8. Revision history**

| Date | Revision | Changes |
|---|---|---|
| 01-Feb-2007 | 1 | First release |

**Please Read Carefully:**

Information in this document is provided solely in connection with ST products. STMicroelectronics NV and its subsidiaries (“ST”) reserve the right to make changes, corrections, modifications or improvements, to this document, and the products and services described herein at any time, without notice.

All ST products are sold pursuant to ST’s terms and conditions of sale.

Purchasers are solely responsible for the choice, selection and use of the ST products and services described herein, and ST assumes no liability whatsoever relating to the choice, selection or use of the ST products and services described herein.

No license, express or implied, by estoppel or otherwise, to any intellectual property rights is granted under this document. If any part of this document refers to any third party products or services it shall not be deemed a license grant by ST for the use of such third party products or services, or any intellectual property contained therein or considered as a warranty covering the use in any manner whatsoever of such third party products or services or any intellectual property contained therein.

**UNLESS OTHERWISE SET FORTH IN ST’S TERMS AND CONDITIONS OF SALE ST DISCLAIMS ANY EXPRESS OR IMPLIED WARRANTY WITH RESPECT TO THE USE AND/OR SALE OF ST PRODUCTS INCLUDING WITHOUT LIMITATION IMPLIED WARRANTIES OF MERCHANTABILITY, FITNESS FOR A PARTICULAR PURPOSE (AND THEIR EQUIVALENTS UNDER THE LAWS OF ANY JURISDICTION), OR INFRINGEMENT OF ANY PATENT, COPYRIGHT OR OTHER INTELLECTUAL PROPERTY RIGHT.**

**UNLESS EXPRESSLY APPROVED IN WRITING BY AN AUTHORIZED ST REPRESENTATIVE, ST PRODUCTS ARE NOT RECOMMENDED, AUTHORIZED OR WARRANTED FOR USE IN MILITARY, AIR CRAFT, SPACE, LIFE SAVING, OR LIFE SUSTAINING APPLICATIONS, NOR IN PRODUCTS OR SYSTEMS WHERE FAILURE OR MALFUNCTION MAY RESULT IN PERSONAL INJURY, DEATH, OR SEVERE PROPERTY OR ENVIRONMENTAL DAMAGE. ST PRODUCTS WHICH ARE NOT SPECIFIED AS "AUTOMOTIVE GRADE" MAY ONLY BE USED IN AUTOMOTIVE APPLICATIONS AT USER’S OWN RISK.**

Resale of ST products with provisions different from the statements and/or technical features set forth in this document shall immediately void any warranty granted by ST for the ST product or service described herein and shall not create or extend in any manner whatsoever, any liability of ST.

ST and the ST logo are trademarks or registered trademarks of ST in various countries.

Information in this document supersedes and replaces all information previously supplied.

The ST logo is a registered trademark of STMicroelectronics. All other names are the property of their respective owners.

© 2007 STMicroelectronics - All rights reserved

STMicroelectronics group of companies

Australia - Belgium - Brazil - Canada - China - Czech Republic - Finland - France - Germany - Hong Kong - India - Israel - Italy - Japan - Malaysia - Malta - Morocco - Singapore - Spain - Sweden - Switzerland - United Kingdom - United States of America

**www.st.com**